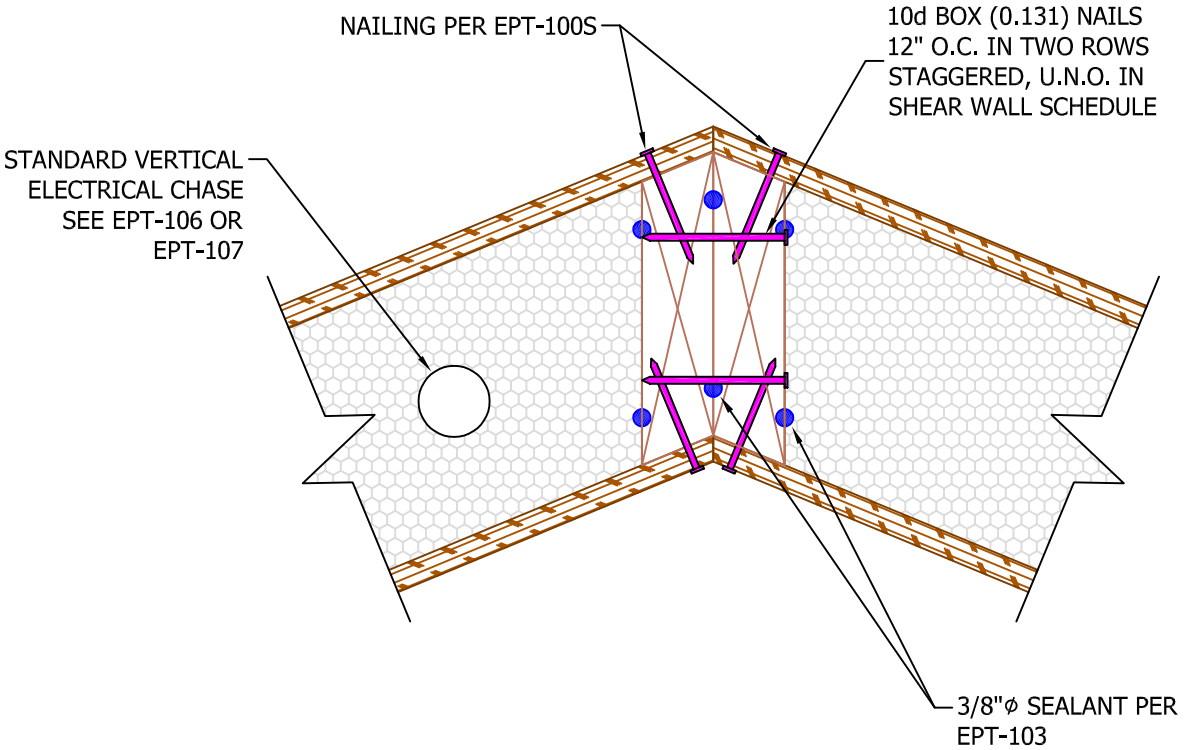

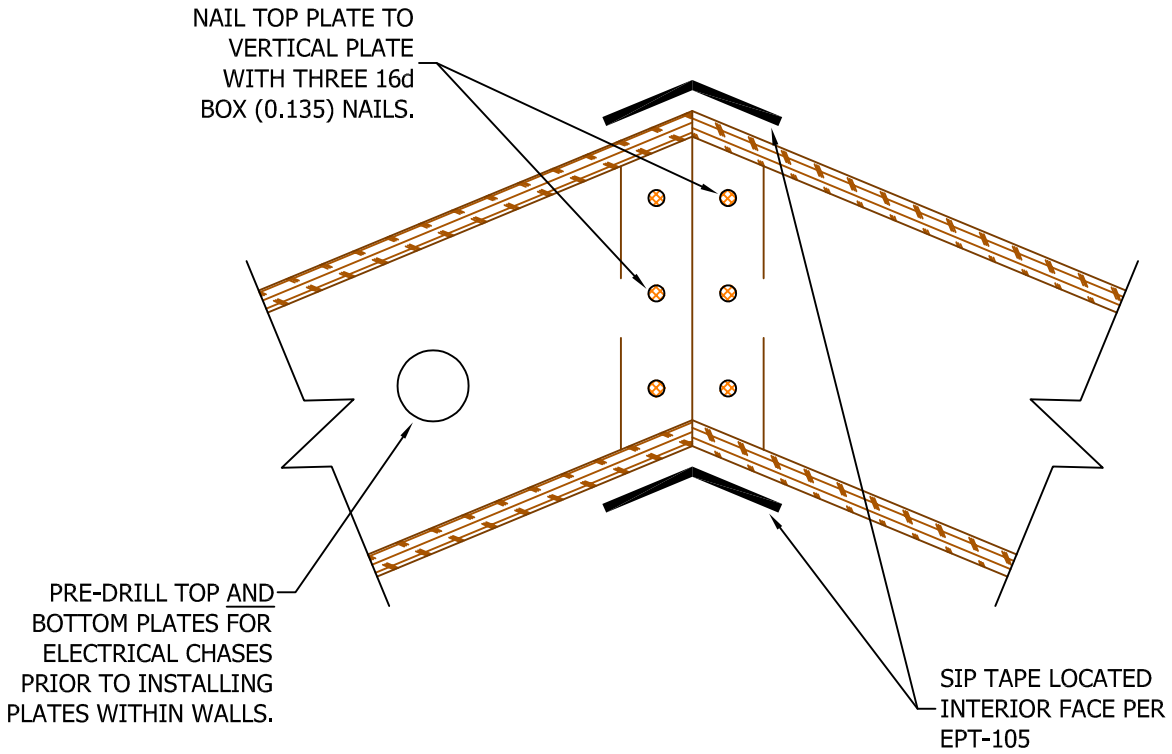

N.T.S.

Rev: 12/10/2021

EPT-404	WALL ANGLED CORNER

EXTREME PANEL TECHNOLOGIES